CMP DROP INLET AND BAFFLE

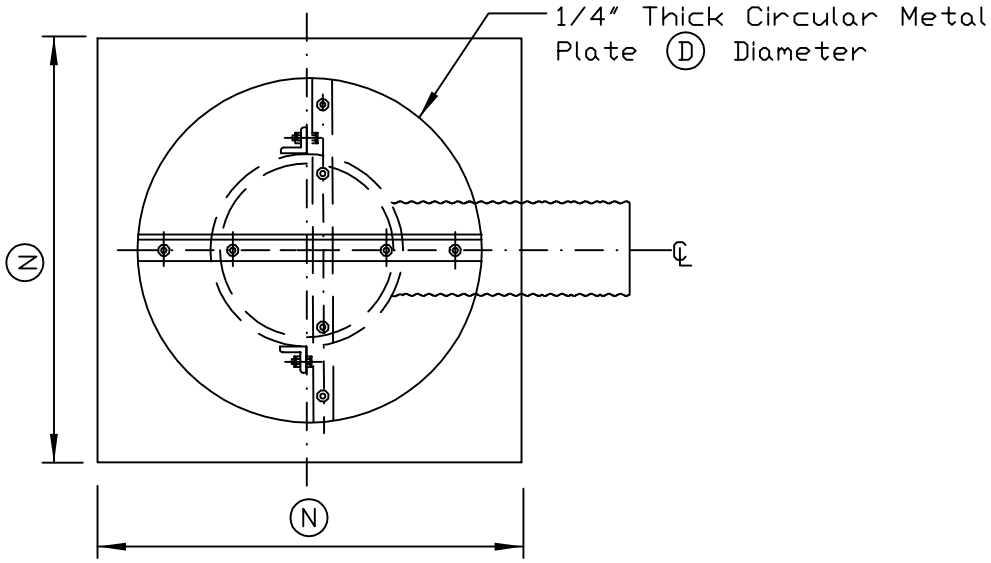

PLAN

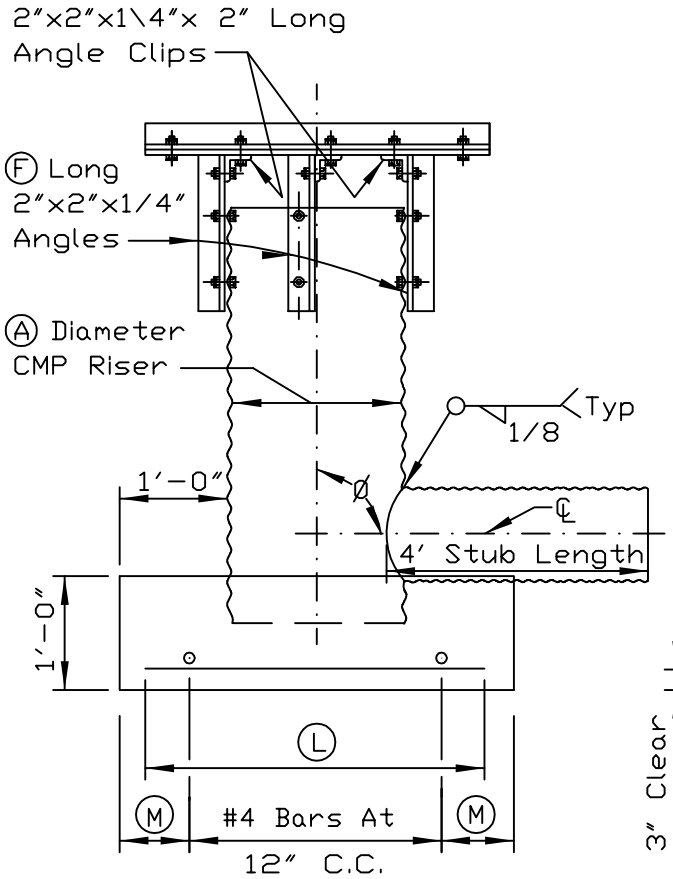

SIDE ELEVATION

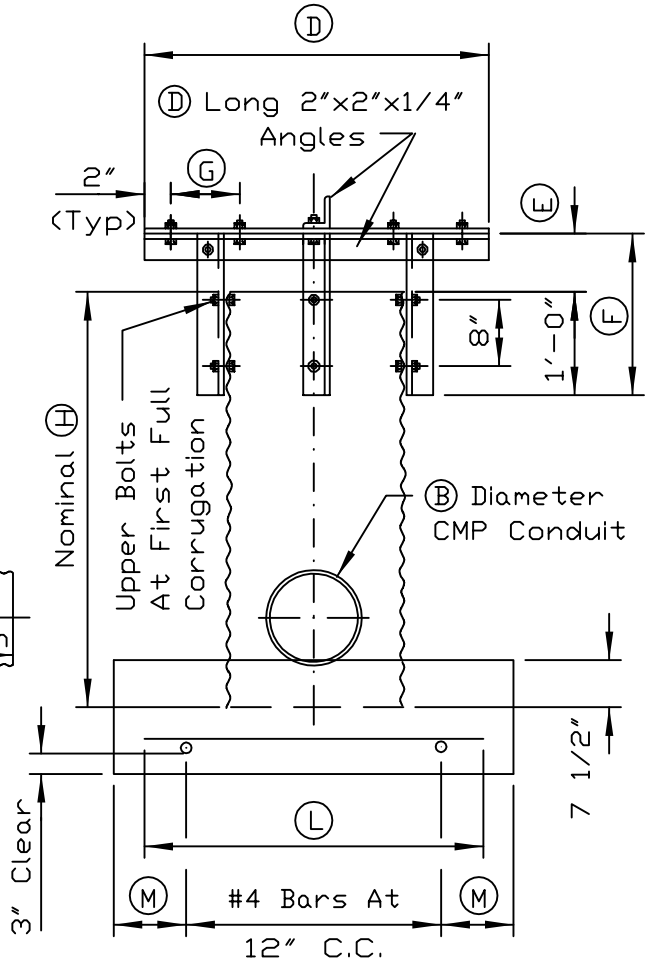

DOWNSTREAM ELEVATION

REFERENCE		
Project		
Designed	Date	
Checked	Date	
Approved	Date	

NRCS
Natural Resources Conservation Service

STANDARD DWG. NO.
IL-578
SHEET 1 OF 3
DATE 9-23-93